TR22&24 | CCT Troffer

Project:_____ Type:_____

Name:_____ Date:_____

2x2 Watts	24W + 36W	**2x4 Watts**	36W + 42W + 50W
Lumens	3000, 4500lm	**Lumens**	4500, 5500, & 6250lm
Size	see diagram	**CCT Tunable**	3500K, 4000K, 5000K
Voltage	120-277V	**IP Rating**	IP20
Dimming	Wall Dimmer	**Materials**	Cold Rolled Steel, PC
Beam Angle	120°	**Finish**	White
CRI	>80	**Lens**	Frosted
PF	≥ 0.9	**Lifespan**	50,000 Hours

OVERVIEW

CCT: Tunable

Applications: IP20

Efficacy: 125lm/W

Dimming: 0-10V

LED Type: SMD 2835

Lens Type: Clear

Driver: XZSE40B-380065-085-065-Y-D

Operating Temp: -4° to

Operating Humidity: 85%RH Max

Lifespan: 50,000 Hours

Warranty: 5 Years

FEATURES

- Customize your experience with CCT Tunable and Watt Adjustable options

SARIN LED CCT Troffers are a combination of functional and decorative lighting, and are an excellent replacement for fluorescent ceiling fixtures. These Troffers are intended only for indoor use.

LED Indirect Troffers are ideal for locations that would benefit from soft lighting, such as waiting rooms, offices, places of worship, classrooms, and more. This fixture allows you to adjust the wattage and color temperature to your liking.

TR22&24 | CCT Troffer

Project:_____ Type:_____

Name:_____ Date:_____

PHOTOMETRICS:

TR22

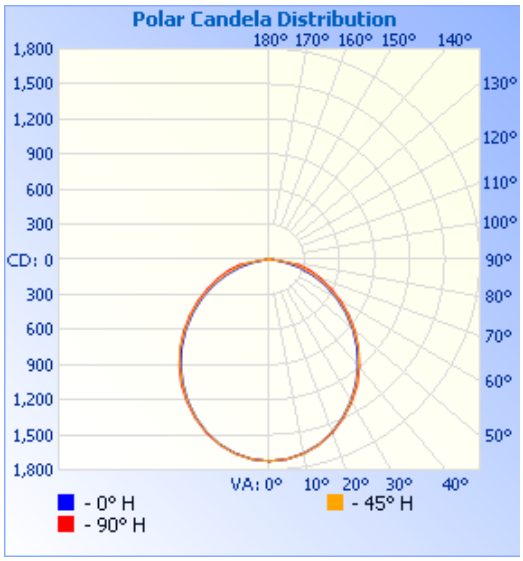

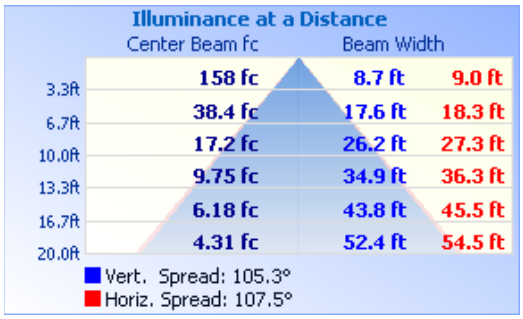

TR24

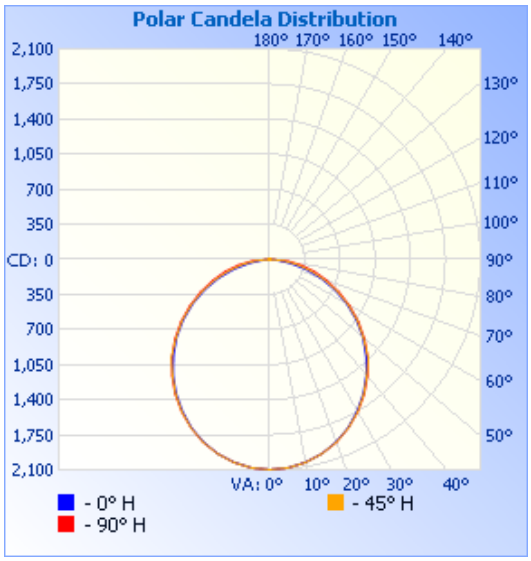

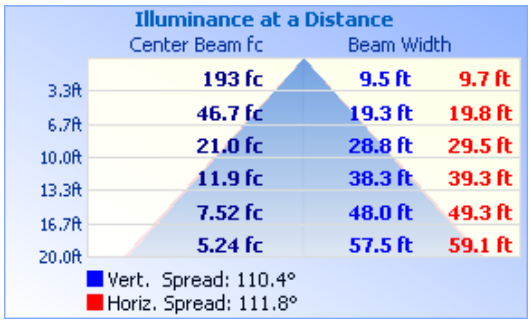

DIMENSIONS:

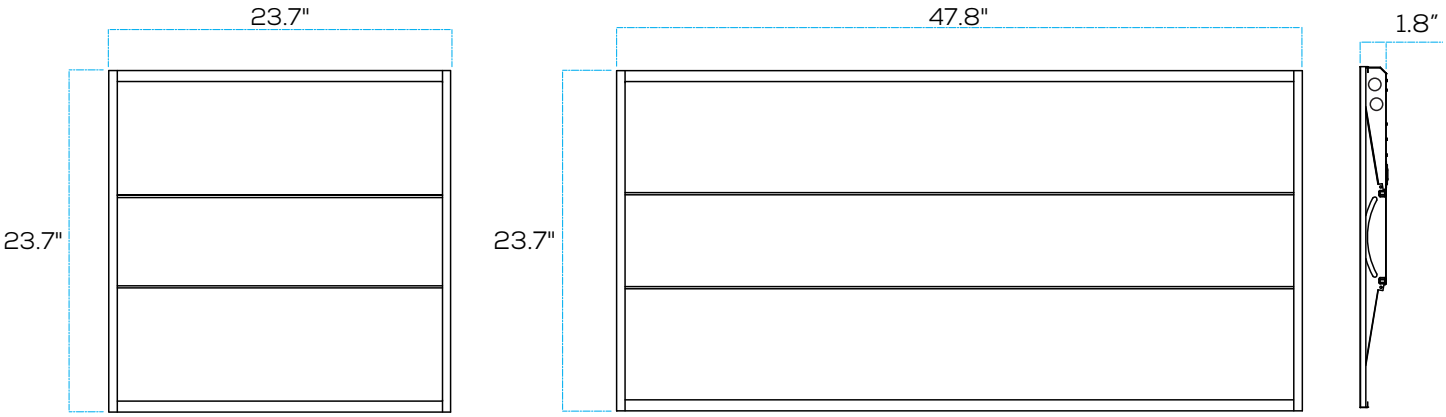

TR22&24 | CCT Troffer

Project:_____ Type:_____

Name:_____ Date:_____

ORDER FORM:

(*) Special Order/Not Commonly Stocked

Custom Model Assembly

	Fixture	CCT	Watt Adjustable	Voltage
	☐ TR22	☐ Tunable	☐ 24W + 36W	☐ 120-277V
SES-TR22-CCT-WW Example Model Number	☐ TR24		☐ 36W + 42W + 50W	

_____	**SES** —	— **Tunable** —	— **120-277V**
Quantity	Fixture	CCT	Watt Adjustable	Voltage

Common Stock Models:

Item #	Model #
11264	SES-TR24-35/40/50-36/42/50-T
11267	SES-TR22-CCT-WW
11268	SES-TR22-CCT-WW-EM
11269	SES-TR24-CCT-WW-EM