HB28

WATTAGE ADJUSTABLE UFO HIGH BAY

Project:_____ Type:_____

Name:_____ Date:_____





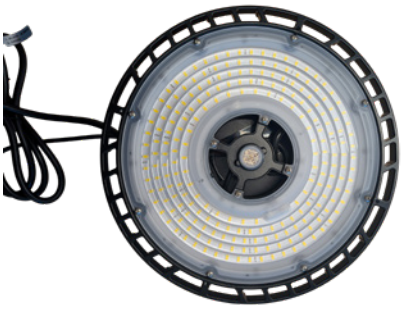

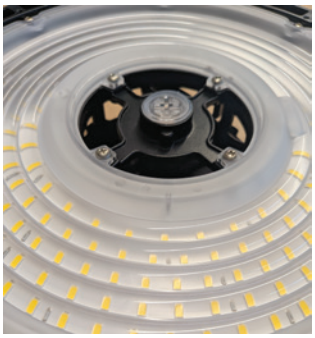



Size	10.83"/12.60" x 5.75"	**Lumens**	100W/120W/150W: 21000lm-21800lm 150W/200W/240W: 33600lm-34800lm
Watts	100W/120W/150W 150W/200W/240W	**CCT**	5700K
Voltage	120-277V	**IP Rating**	IP65
Dimming	0-10V dimming	**Materials**	Die-cast aluminum
Beam Angle	90°	**Finish**	Black
CRI	>80	**Lens**	Clear
PF	≥ 0.9	**Lifespan**	50,000 Hours

OVERVIEW

CCT: 5700K

Applications: IP65

Efficacy: 136-148lm/W

Dimming: 0-10V

LED Type: Bridgelux SMD2835

Lens Type: Clear

Driver: 100W/120W/150W: SS-150CNH-300 BHD; 150W/200W/240W: SS-240CNH-300 BHD

Operating Temp: -13°F to 122°F

Operating Humidity: 20% - 90% RH

Lifespan: 50,000 Hours

Warranty: 5 Years

FEATURES

- Wattage adjustable
- Hook Mount

SARIN LED UFO High Bay lights are commonly used in the lighting of workshops, factories, warehouses, large retail spaces, gas stations, and gymnasiums. These fixtures are suitable for a variety of applications, and will provide significant energy savings. Round high bay LED lights provide a circular light beam angle of 90°.

This High Bay provides uniform light distribution and features a die-cast aluminum construction, making the lights extremely durable.

This LED Round High Bay is 0-10V dimming and features a motion sensor base allowing for further customization. Comes with 1m power cord + 0.3m dimming cable.

HB28

WATTAGE ADJUSTABLE UFO HIGH BAY

Project:_____ Type:_____

Name:_____ Date:_____

PHOTOMETRICS:

100W/120W/150W

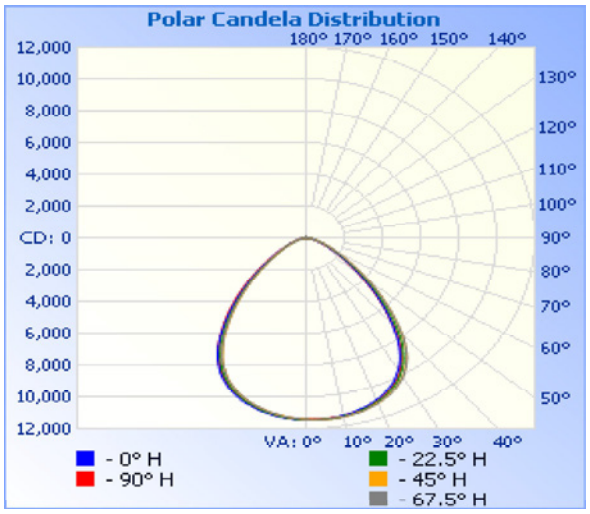

	Center Beam fc	Beam Width	
3.0ft	1,270 fc	5.6 ft	5.6 ft
6.0ft	318 fc	11.2 ft	11.3 ft
9.0ft	141 fc	16.8 ft	16.9 ft
12.0ft	79.4 fc	22.4 ft	22.6 ft
15.0ft	50.8 fc	27.9 ft	28.2 ft
18.0ft	35.3 fc	33.5 ft	33.9 ft

Vert. Spread: 85.9°

150W/200W/240W

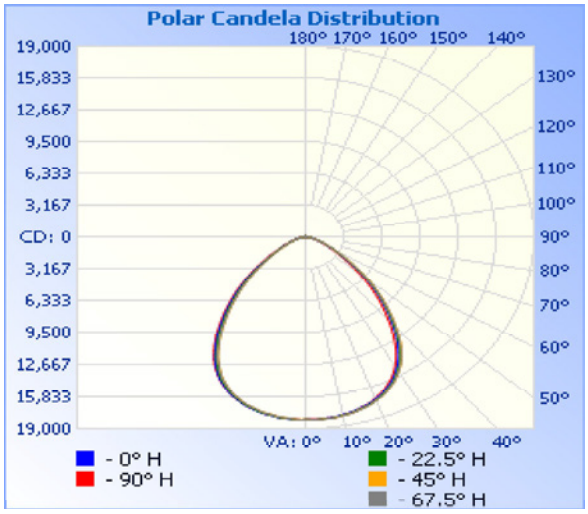

	Center Beam fc	Beam Width	
3.0ft	2,012 fc	5.8 ft	5.7 ft
6.0ft	503 fc	11.7 ft	11.5 ft
9.0ft	224 fc	17.5 ft	17.2 ft
12.0ft	126 fc	23.3 ft	22.9 ft
15.0ft	80.5 fc	29.2 ft	28.7 ft
18.0ft	55.9 fc	35.0 ft	34.4 ft

Vert. Spread: 88.4°

IMPORTANT SAFEGUARDS:

1. Installation, service and maintenance should be performed by a qualified licensed electrician.
2. Make all electrical and grounded connections in accordance with national electrical code and any applicable local code requirements.
3. Disconnect power at fuse or circuit breaker before installing or servicing.
4. Review the diagrams thoroughly before beginning.
5. Do not mount in hazardous locations, or near gas or electric heaters.
6. Do not let power cords touch hot surfaces.
7. Equipment should be mounted in locations where it will not be subjected to tampering by unauthorized personnel.
8. Do not use equipment for other than its intended use.

DIMENSIONS:

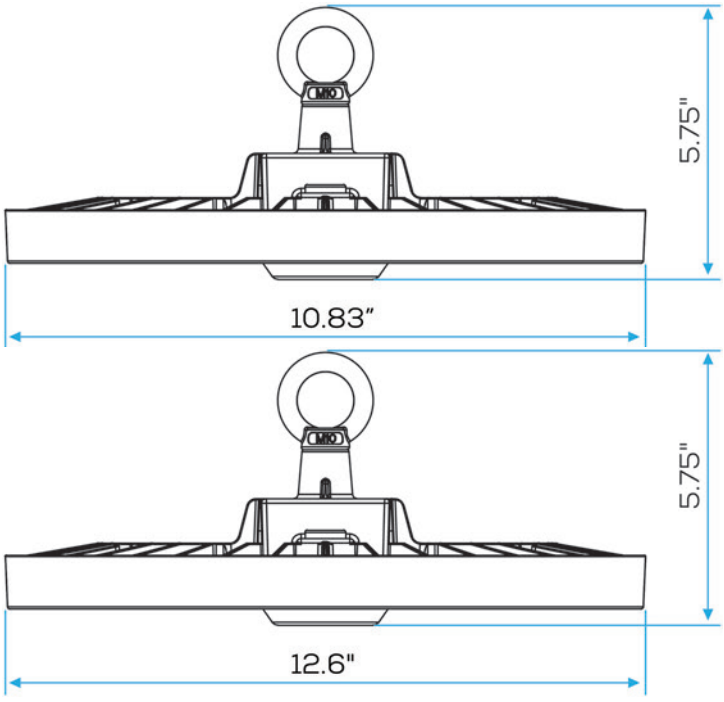

HB28 | WATTAGE ADJUSTABLE UFO HIGH BAY

Project:_____ Type:_____

Name:_____ Date:_____

INSTALLATION INSTRUCTIONS:

Optional Function:
This fixture is designed with integrated function of, 3 wattage adjustable, and the settings can be customized.
Operation: Remove the plug, adjust the switches as indicated to select the desired, wattage. Then screw the plug back after finished setting.
The original settings can be the factory default settings or be customized.

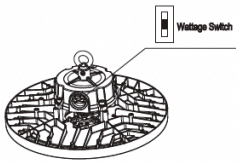

LED High Bay Light
Installation Instruction

Cautions:
1. Do not use any electric generator to test the LED light.
2. Please abide by related country, regional and local law and regulations when installing this fixture.
3. Please turn off the power before installation or maintenance.
4. Proper earth grounding is required to ensure safety.

Notice:
1. To avoid possibility of electrical shock or fire, the installation personnel must have professional electric knowledge.
2. Please wear gloves to avoid injury before installation.
3. If any smoke or spark of the wire happened, please turn off the power immediately and notify relevant personnel.
4. Please use listed water proof strain relief bushing when connecting the supply cord to the outlet box.

Attention:
1. Please check if there is any damage during shipping. If so, please contact manufacturer timely.
2. Please read the installation instruction carefully to check whether all the accessories are complete. After confirmation, install the fixture according to installation steps.

Wiring Diagram & Instruction:
3 dimming functions are available in this high bay light:
1. Constant current can be achieved by 0-10V DC dimming;
2. PWM signal dimming;
3. Variation of resistance unit dimming.

Description:
This product is 0/1-10V dimming,below dimmers are recommended:

Brand	Model
LUTRON	NTSTV-DV
LEVITON	DSTI0-10Z / IP710
LEGRAND	RH4FBL3PW

Wiring Instruction:
ACL: Black/Brown, ACN: White/Blue, ⏚ Green/Yellow, DIM +: Purple,DIM -: Pink AUX: Black/White (As for the wire color of DIM+ and DIM-, pls check the light label.)



Please choose the appropriate dimming way according to your needs. You can also choose not to use this function.
*The product can not be connected to a dimming device when it's equipped with Motion Sensor.

Installation Methods: Hook Mount, Ceiling Mount, 1/2" NPT Mount. (Please choose the most suitable installation method for the purchased product as per your needs)

A. Hanging Mount: (Hook or eyebolt)
Step 1. Screw the hook into the fixture, tighten and fix it. (figure 1)
Step 2 .Hang the fixture on the ceiling hook or chain. (figure 2)
Step 3. After installation, connect the wire of the fixture to the mains according to local wiring rules, ensure the connection is stable and make good protection on the connection.



Figure 1



Figure 2

B. Ceiling Mount:
Step 1. Mark with a mark pen or sharp tool on the mounting surface and drill. (Figure 3)
Step 2. Fix screws into the holes with a hammer. (Figure 4)
Step 3. Align the bracket hole with screw hole (Figure 5), and push the fixture to one side (Figure 6) and fix it.
Step 4. After installation, connect the wire of the fixture to the mains according to local wiring rules, ensure the connection is stable and make good protection on the connection. By adjusting the brackets screws, users can adjust 50° to the left or right vertically. (Figure 7)



Figure 3 Figure 4 Figure 5 Figure 6 Figure 7

C. 1/2"NPT Mount:
Step 1. Unscrew the nuts on 1/2" NTP. (Figure 8)
Step 2. Insert 1/2" NTP stem into the bracket hole. (Figure 9)
Step 3. Re-screw the nuts. (Figure 10),After installation, connect the wire of the fixture to the mains according to local wiring rules, ensure the connection is stable and make good protection on the connection. By adjusting the brackets screws, users can adjust 50° to the left or right vertically.



Figure 8 Figure 9 Figure 10

Extra Accessory Option Installation: 1:Wire Guard, 2:Motion Sensor / PIR Sensor, 3: Aluminum reflector/PC reflector 4: Safety cable:

1. Wire Guard: (Purchase the correct size wire guard from manufacturer)
Place the wire guard on the lamp and fix it with screws. (Figure 11)



Figure 11

2. DC Motion Sensor / PIR Sensor (Both sensors are with the same installation method)
Step 1. Use a screwdriver to remove the 1/2 plug from the sensor; (Figure 12)
Step 2. Twist-lock the DC sensor to the base to make it work properly, use a remote control to adjust the working mode as per demand. (Figure 13)



Figure 12

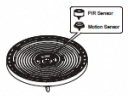

Figure 13

3: Aluminum reflector / PC reflector
Step 1. Lock the PC reflector or Aluminum reflector to the lamp with screws.
Step 2. Installation complete. (Figure 14)

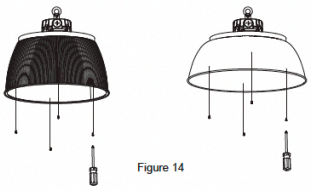

Figure 14

4: Safety cable:
Step 1. Fix the safety rope on the lamp body with screws. (Figure 15)
Step 2. Fix the safety buckle on the rail, and the installation is finished.

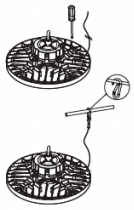

Figure 15

HB28

WATTAGE ADJUSTABLE UFO HIGH BAY

Project:_____ Type:_____

Name:_____ Date:_____

ORDER FORM:

(*) Special Order/Not Commonly Stocked

Custom Model Assembly

Fixture	CCT	Watts	Beam Angle	Voltage
☑ HB28	☑ 5700K	☐ 100/120/150W ☐ 150/200/240W	☑ 90°	☑ 120-277V

SES-HB28-5700K-24/20/15
Example Model Number

Quantity	SES	—	HB21	—	5700K	—	100/120/150W	—	90°	—	120-277V
			Fixture		CCT		Watts		Beam Angle		Voltage

Common Stock Models:

Item #	Model #
11500	SES-HB28-5700K-15/20/10
11501	SES-HB28-5700K-24/20/15

Optional Accessories:

Item #	Model #	Quantity
11469	HB01DMS	
11345-C	SES-HB11&HB18B-REMOTE	
11123	SES-HB11-EM	
11124	SES-HB11-150W-COVER	
11125	SES-HB11-240W-COVER	
10776-A	SES-HB11-MOTION	



111469



11345-C



11123



11124



11125



10776-A