Installation Instruction

Bollard Light

Warning:

Read all instructions carefully before preforming any work. It may cause demages if this instrucion not followed properly.

Step of instruction:

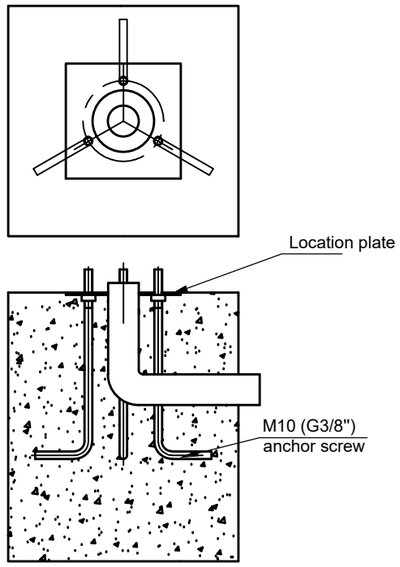

STEP 1

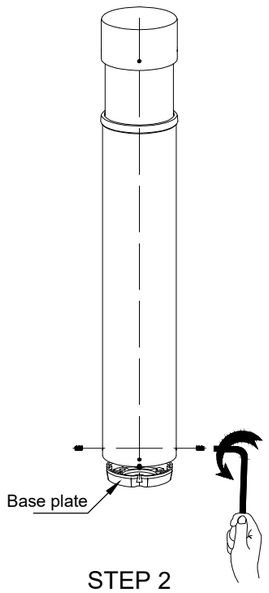

STEP 2

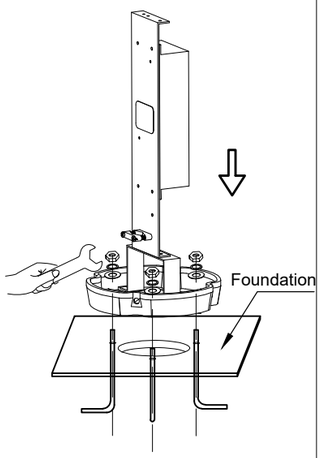

STEP 3

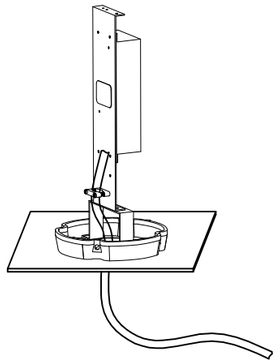

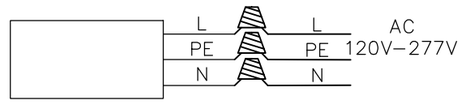

STEP 4

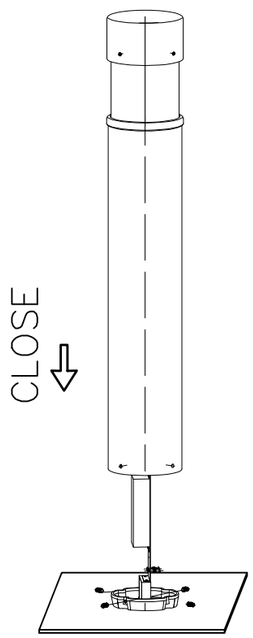

STEP 5

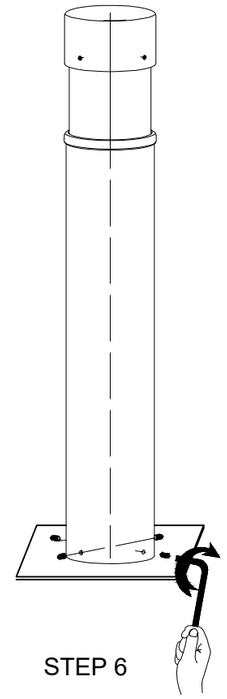

STEP 6