BL812

LED 8" Landscaping Bollard

Project:_____ Type:_____

Name:_____ Date:_____





Size	8"	**Lumens**	2500LM
Watts	12W/20W/25W	**CCT**	3000/4000/5000K
Voltage	120-277V	**Efficacy**	100lm/W
Backup Time	≥90 minutes	**IP Rating**	IP66
Mounting	Flange Mounting	**Materials**	Aluminum Alloy + PC
Beam Angle	150°	**Finish**	Sand Texture RAL9005
CRI	70	**Lens**	Transparent PC
PF	0.9	**Warranty**	5 years

The SARIN 8-Inch LED Bollard Light is engineered to deliver durable, high-performance pathway and perimeter illumination for commercial and architectural applications. Designed for pedestrian walkways, building entrances, parking areas, and landscape environments, this fixture combines robust construction with energy-efficient LED technology to ensure long-term reliability and consistent light output. The heavy-duty housing is built for outdoor durability and corrosion resistance, while the precision optical design provides uniform, glare-controlled distribution for enhanced visibility and safety. Suitable for ground-mounted installations in demanding environments, the SARIN 8-Inch Bollard Light offers a clean architectural aesthetic with dependable performance for both new construction and retrofit projects.

OVERVIEW

CCT: 3000/4000/5000K

IP Rating: IP66

Efficacy: 100lm/W

Lens Type: Clear

Driver Model: Independent

Inventronics IT 0-10V

Operating Temp: -13°F to 122°F

Operating Humidity: 10%-85% RH

Warranty: 5 Years

FEATURES

- Integrated high-efficiency LED light engine for long service life and reduced maintenance
- Durable, corrosion-resistant housing designed for outdoor environments
- Heavy-duty ground-mount design for walkways, entrances, and perimeter applications

BL812

LED 8" Landscaping Bollard

Project:_____ Type:_____

Name:_____ Date:_____

DIMENSIONS:





BL812

LED 8" Landscaping Bollard

Project:_____ Type:_____

Name:_____ Date:_____

PHOTOMETRICS:

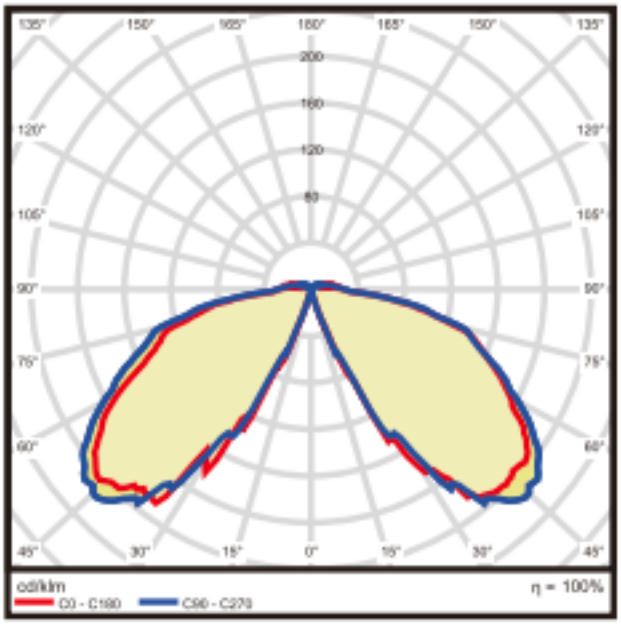

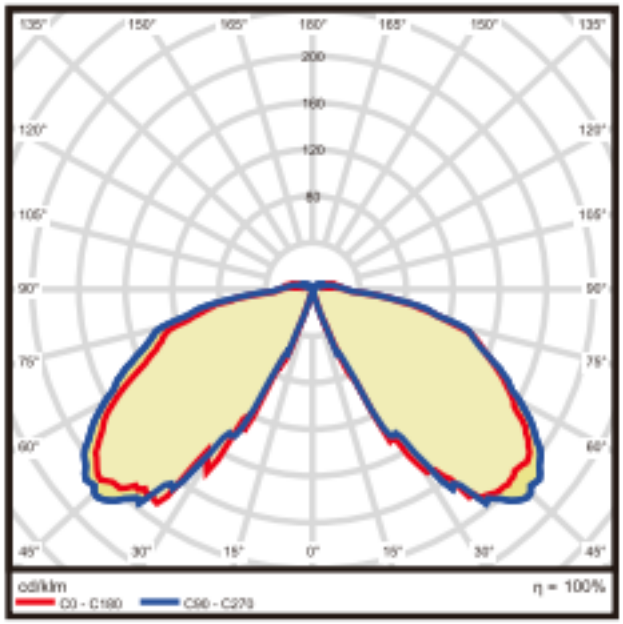

Installation Instruction

Bollard Light

Warning:

Read all instructions carefully before preforming any work. It may cause demages if this instrucion not followed properly.

Step of instruction:

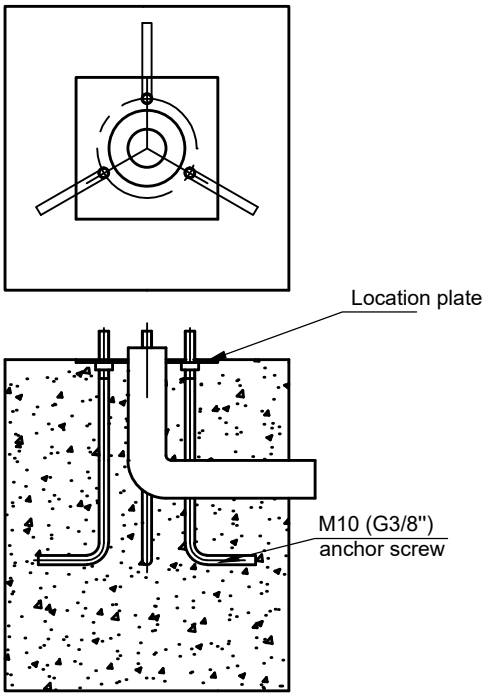

STEP 1

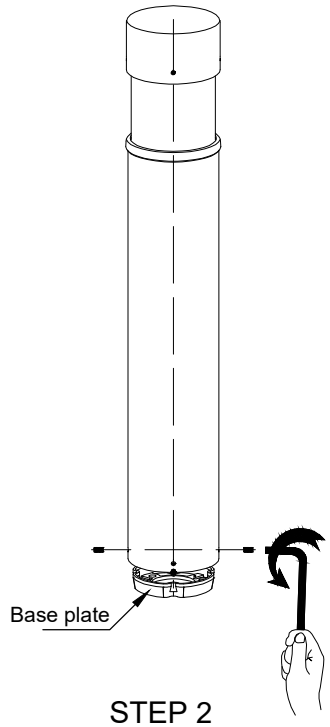

STEP 2

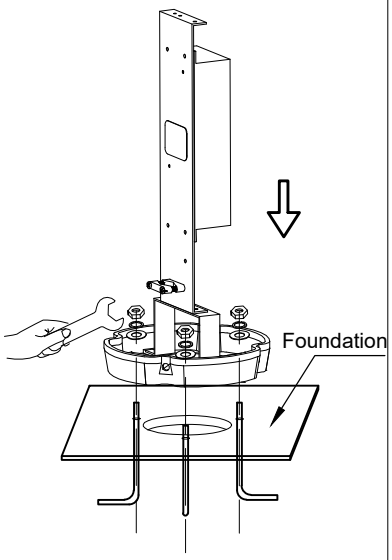

STEP 3

BL812

LED 8" Landscaping Bollard

Project:_____ Type:_____

Name:_____ Date:_____

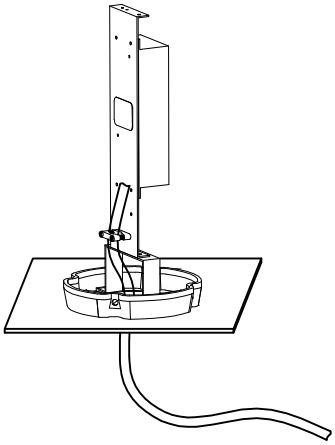

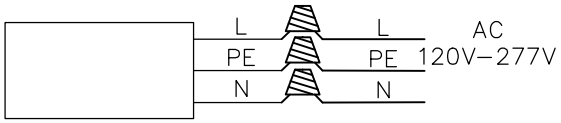

STEP 4

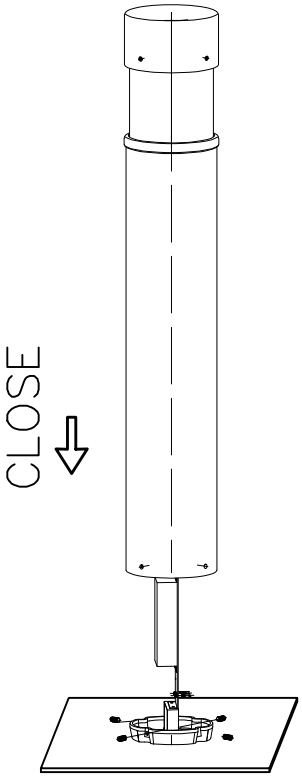

STEP 5

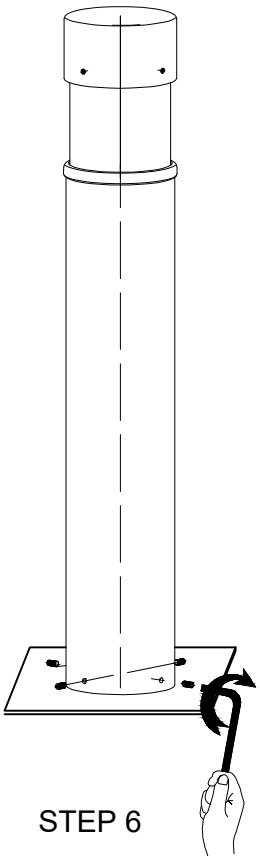

STEP 6

BL812

LED 8" Landscaping Bollard

Project:_____ Type:_____

Name:_____ Date:_____

ORDER FORM:

(*) Special Order/Not Commonly Stocked

Custom Model Assembly

SES-BL812B-CCT-25W
Example Model Number

Fixture	CCT	Watts
☑ BL812B	☑ 3000K	☑ 12W
☐ BL812D	☐ 4000K	☐ 20W
	☐ 5000K	☐ 25W

Quantity	SES	–	BL812B	–	3000K	–	12W
			Fixture		CCT		Watts

Common Stock Models:

Item #	Model #
11550	SES-BL812B-CCT-25W
11551	SES-BL812D-CCT-25W

©2026